Convotherm 4 Deluxe easyDial Combi Steamer

C4DEBD20.10 ELECTRIC BOILER 20 x 1/1 GN

- Boiler system
- Natural Smart Climate™ (ACS+) cooking methods: Steam, Combi-steam, Convection
- Natural Smart Climate™ extra functions:
  - Crisp&Tasty - 5 moisture-removal settings
  - BakePro – 5 levels of traditional baking
  - HumidityPro - 5 humidity settings
  - Controllable fan – 5 speed settings
- easyDial: all functions are set on one operating level
- ConvoClean fully automatic cleaning system
- HygieniCare
- USB port integrated in the control panel
- TriColor indicator ring - indicates the current operating status
- Steam generated by high-performance boiler outside the cooking chamber
- Triple glass appliance door
- Right-hinged appliance door

Standard Features

- Cooking methods:
  - Steam (30-130°C) with guaranteed steam saturation
  - Combi-steam (30-250 °C) with automatic moisture control
  - Convection (30-250 °C) with optimised heat transfer
- Operation of easyDial user interface:
  - Central control unit, Convotherm-Dial (C-Dial)
  - Digital display
- Climate Management
  - Natural Smart Climate™ (ACS+), HumidityPro, Crisp&Tasty
- Quality Management
  - Airflow Management, BakePro, Multi-point core temperature probe
- Production Management
  - 99 cooking profiles each containing up to 9 steps
  - HACCP data storage
  - USB port
  - Regenerating function - regenerates products to their peak level
  - Preheat and cool down function
- Cleaning Management:
  - ConvoClean: Fully automatic cleaning system, with optional single-dose dispensing
- HygieniCare: safety by antibacterial surfaces
  - Hygienic Handles
- Door handle with sure-shut function
- Adjustable appliance feet, from 100 mm to 125 mm
- Integrated recoil hand shower

Options

- Steam and vapour removal (built-in condensation hood)
- Sous-vide sensor, with external socket
- Core temperature sensor, with external socket
- Ethernet / LAN interface
- Marine model
- Available in various voltages

Accessories

- ConvoLink – HACCP and cooking profile management PC software
- ConvoVent 4 condensation hood with grease filter
- ConvoVent 4+ condensation hood with grease and odour filter
- Banquet system package: plate rack, mobile shelf rack, transport trolley, thermal cover (individual items are available)
- Care products for ConvoClean fully automatic cleaning system (multiple and single-dose dispensing)

CONVOTHERM®

Convotherm 4 Deluxe easyDial Combi Steamer

C4DEBD20.10 ELECTRIC BOILER 20 x 1/1 GN

Front view

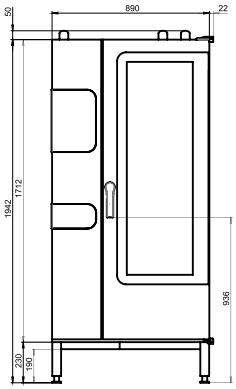

View from above with wall clearances

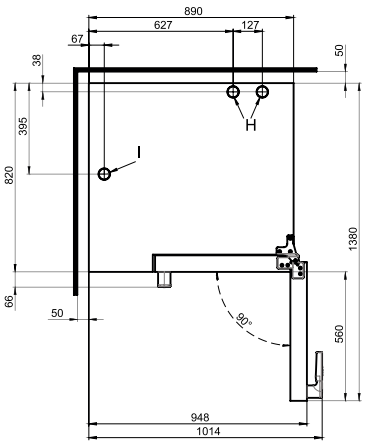

Connection positions in appliance floor

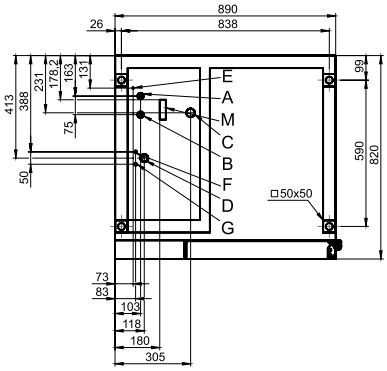

A Water connection (for boiler)
B Water connection (for cleaning, recoil hand shower)
C Drain connection DN 50
D Electrical connection
E Equipotential bonding
F Rinse aid connection
G Cleaning agent connection
H Air vent Ø 50 mm
I Dry air intake Ø 50 mm
M Safety overflow 80 mm x 25 mm

DIMENSIONS	
Width	890 mm
Depth	820 mm
Height	1942 mm
Weight	280 kg
PACKED DIMENSIONS	
Width	1165 mm
Depth	970 mm
Height	2150 mm
Weight (including cleaning system)	320 kg
Safety clearances*	
Rear	50 mm
Right	50 mm
Left (larger recommended for servicing)	50 mm
Top (for ventilation)	500 mm

*Heat sources must lie at a minimum distance of 500 mm from the appliance.

INSTALLATION REQUIREMENTS
For precise installation instructions please refer to the units installation manual

LOADING CAPACITY	
Max. number of food containers	
Shelf distance	68mm
GN 1/1 (with standard loading trolley)	20
600 x 400 baking sheet (with appropriate loading trolley)	17
Max. loading weight GN 1/1 / 600 x 400	
Per combi steamer	100 kg
Per shelf	15 kg

ELECTRICAL SUPPLY	
3N~ 400V 50/60Hz (3P+N+E)	
Rated power consumption	38.9 kW
Rated current	56.2 A
Fuse	63 A
RCD (GFCI), frequency converter (singlephase)	Type A (recommended), type B/F (optional)

Special voltage options available on request.
Connection to an energy optimisation system as standard.

WATER CONNECTION	
Water supply	
2 x G 3/4" permanent connection, optionally including connecting pipe (min. DN13 / 1/2")	
Flow pressure	150 - 600 kPa (1.5 - 6 bar)
Appliance drain	
Drain version	Permanent connection (recommended) or funnel waste trap
Type	DN50 (min. internal Ø: 46 mm)
Slope for waste-water pipe	min. 3.5% (2°)

WATER QUALITY	
Drinking water	
Total hardness	
Cleaning, recoil hand shower, boiler	4-20 °dh / 70-360 ppm / 7-35 °TH / 5-25 °e
Properties	
pH	6.5 - 8.5
Cl- (chloride)	max. 60 mg/l
Cl_2 (free chlorine)	max. 0.2 mg/l
SO_4^{2-} (sulphate)	max. 150 mg/l
Fe (iron)	max. 0.1 mg/l
Temperature	max. 40°C
Electrical conductivity	min. 20 µS/cm

EMISSIONS	
Heat output	
Latent heat	6900 kJ/h / 1.92 kW
Sensible heat	8900 kJ/h / 2.47 kW
Waste water temperature	max. 80 °C
Noise during operation	max. 70 dBA

MOFFAT®

Australia
moffat.com.au

New Zealand
moffat.co.nz

Australia
Moffat Pty Limited

Victoria/Tasmania
740 Springvale Road
Mulgrave, Victoria 3170
Ph 03-9518 3888
Fax 03-9518 3833
vsales@moffat.com.au
www.moffat.com.au

New South Wales
Ph 02-8833 4111
nswsales@moffat.com.au

South Australia
Ph 03-9518 3888
vsales@moffat.com.au

Queensland
Ph 07-3630 8600
qldsales@moffat.com.au

Western Australia
Ph 08-9413 2400
wasales@moffat.com.au

New Zealand
Moffat Limited

Christchurch
45 Illinois Drive
Izone Business Hub
Rolleston 7675
New Zealand
Telephone +64 3-983 6600
Facsimile +64 3-983 6660
sales@moffat.co.nz

Auckland
Ph +64 9-574 3150
sales@moffat.co.nz

In line with policy to continually develop and improve its products, Moffat Limited reserves the right to change specifications and design without notice.

© Copyright Moffat Ltd
AN.CON.S.2101

24:7 Service Support